REVISION HISTORY						
REV	ECR	ZONE	REVISION DESCRIPTION	DATE	AUTHOR	APPROVER
1			INITIAL RELEASE	12/20/2023	DSugihara	
2			WIDTH,ADDED TRASH CAN	4/30/2024	AJordan	
3			RED LINES 9/20/2024; WIDTH BACK TO ORIGINAL 26" X LENGTH TO 152"	10/1/2024	DSugihara	
4			RED LINES 12/26/2024; TOP TO 28" DP TOP; ADJUST TOP CUTOUT LOCATIONS FRONT TO BACK, CABINET & BASE DEPTH	1/6/2025	DSugihara	
5			APPROVED 2/28/2025 AS DRAWN; RELEASED FOR PRODUCTION	3/13/2025	DSugihara	

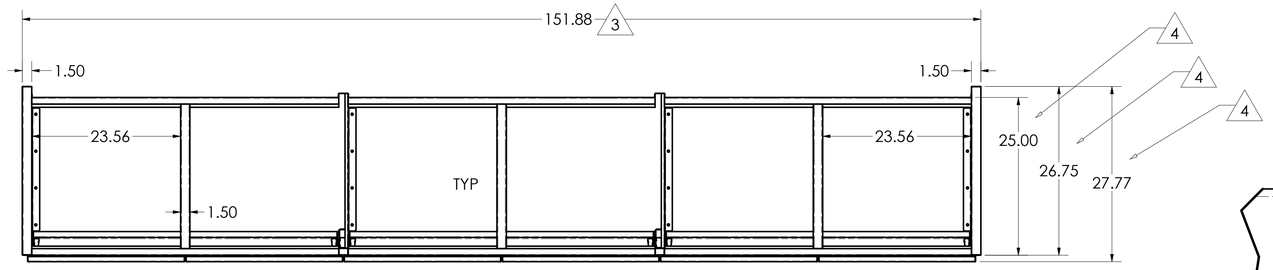

WITHOUT TOP

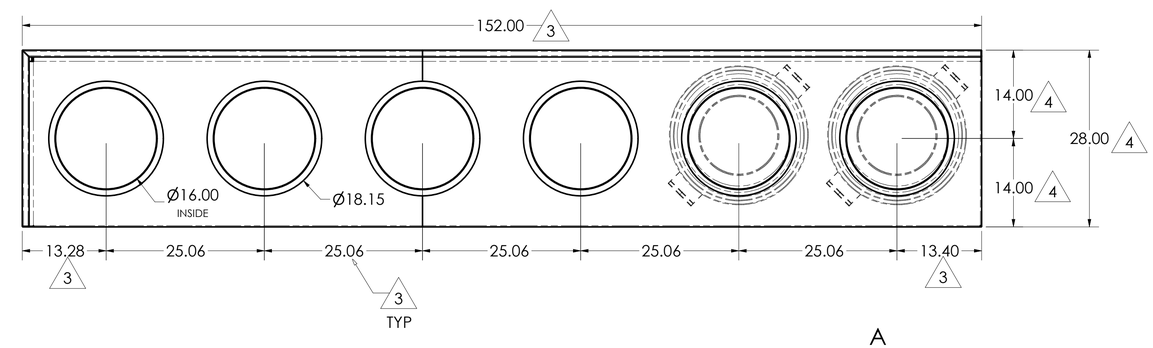

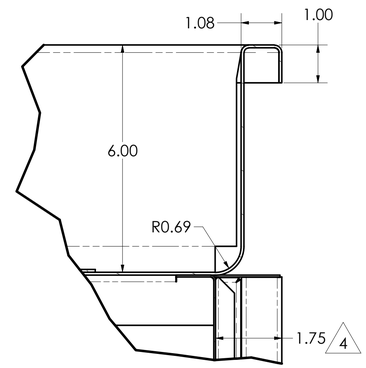

DETAIL B

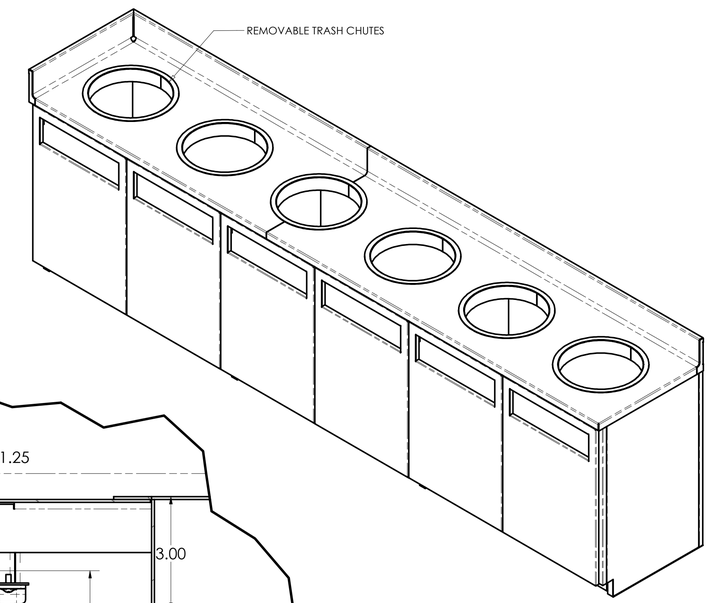

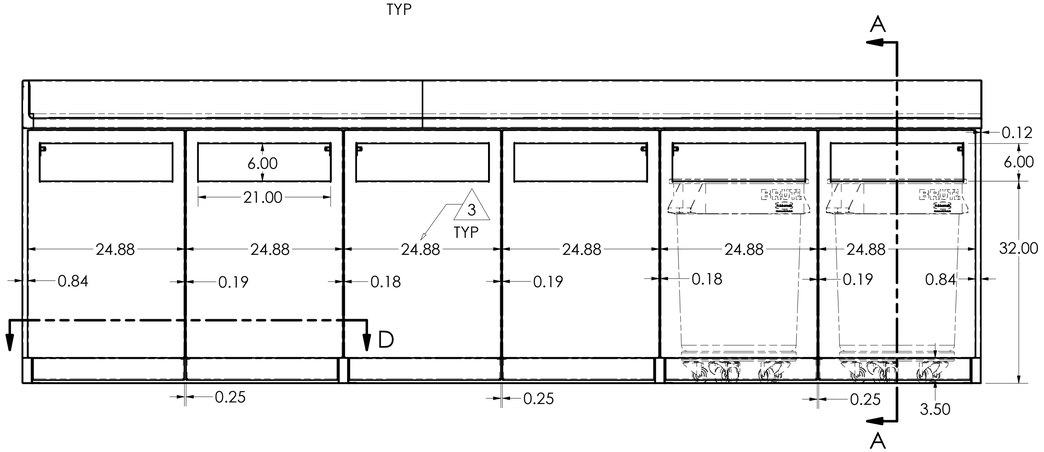

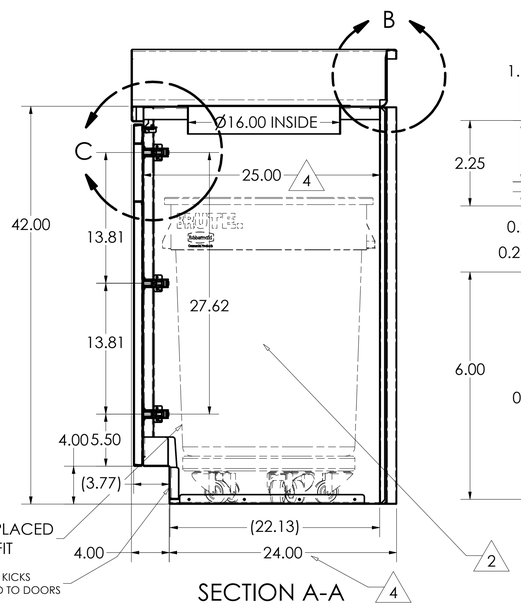

SECTION A-A

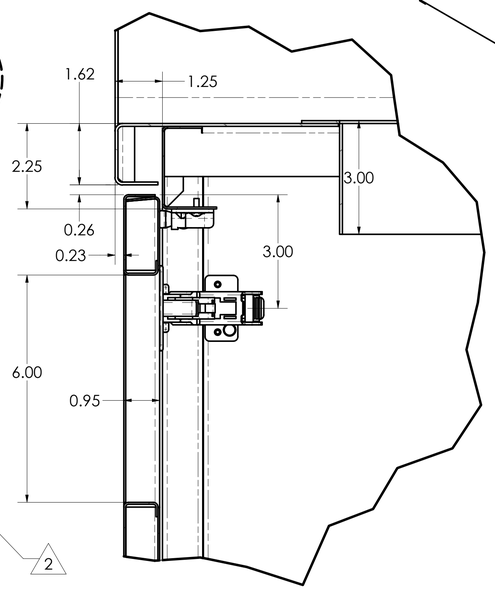

DETAIL C

ALL MATERIALS & DIMENSIONS VERIFIED
MATERIALS:
COUNTER TOP 14 GA SS T304 #4 FINISH
TRASH CHUTES 14 GA SS T304 #4 FINISH
CABINET BODY 18 GA SS T304 #4 FINISH
TOP CHANNELS 14 GA ELECTRO-GALVANIZED
DOOR TOE KICKS 14 GA SS T304 #4 FINISH
HINGES BLUM 71T6550 WITH 175H7100
MOUNTING PLATES
LATCHES SOUTHCO C3-805

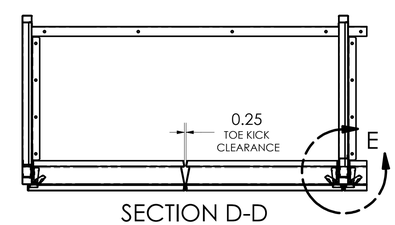

SECTION D-D

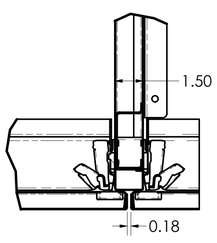

DETAIL E

PART NO.: DFS_000_017_151_3 comp_bk-lt-spl_BLUM_dbl dr-dbl pnl_built-in toe kck_OPN BOT
DESCRIPTION: DFS_000_017_151_3 comp_bk-lt-spl_BLUM_dbl dr-dbl pnl_built-in toe kck_OPN BOT

ITEM #: 233		QTY: 1	
DRAWN: DFS	Pacific Stainless PRODUCTS, INC.	58500 McNulty Way * St. Helens,Oregon 97051 TEL: 503-397-1277 * FAX 503-397-9596 E-mail: info@pacificstainless www.pacificstainless.com	
12/19/2023	SIZE D	JOB PARTNUMBER	CBTD-MOD
INTERPRET PER ASME Y14.5-2009 UNLESS OTHERWISE NOTED: ALL DIMS IN INCHES TOLERANCES ±		JOB DESCRIPTION	Cabinet, 156" Long x 28" Wide,
.XXXX .0005 .XX .13 .XXX .015 X .50 .XX .030 ∠ 1°		JOB DATA	CURTIS RESTAURANT EQUIP KND 1-2 DATA CENTER
DO NOT SCALE		JOB # 56445-048	REV 5 SHEET 1 OF 1

I:\Pack_Go Inventor Files\56445-048\DFS_000_017_151_3 comp_bk-lt-spl_BLUM_dbl dr-dbl pnl_built-in toe kck_OPN BOT.iam