REVISION HISTORY						
REV	ECR	ZONE	REVISION DESCRIPTION	DATE	AUTHOR	APPROVER
1			INITIAL RELEASE	11/14/2025	AJordan	

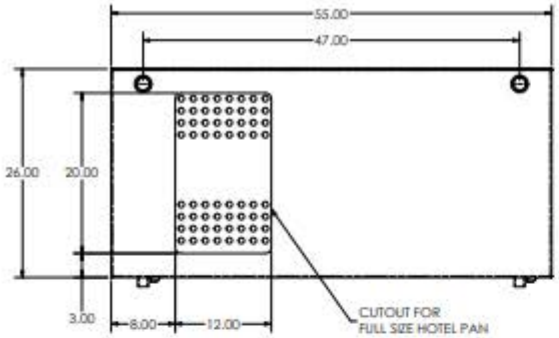

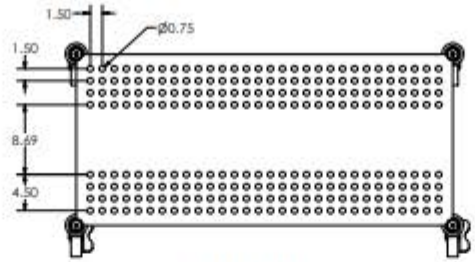

SECTION C-C

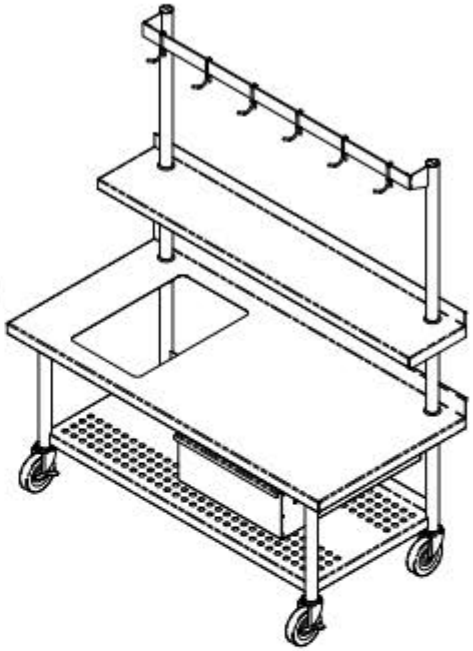

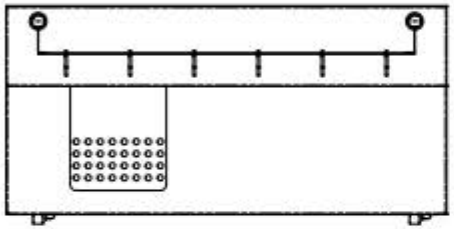

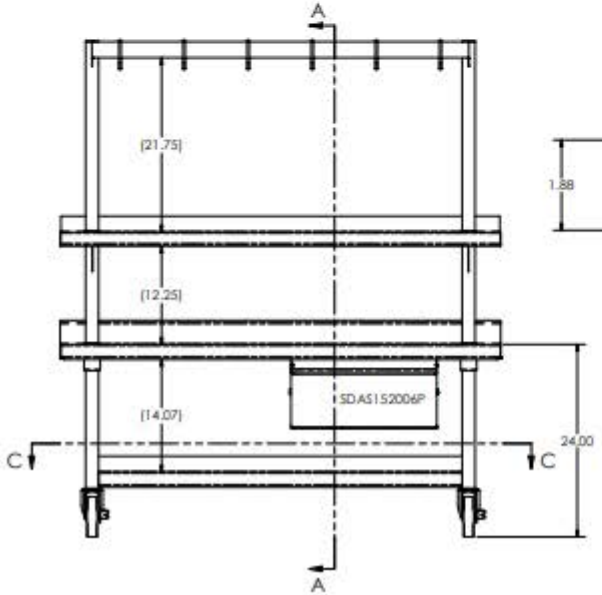

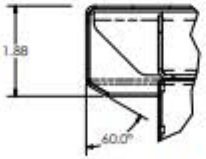

DETAIL B

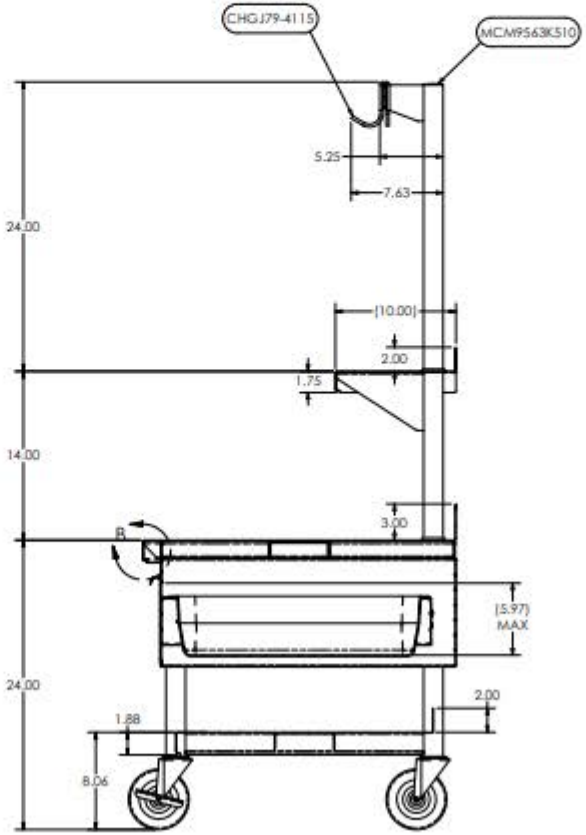

SECTION A-A

MATERIALS:
COUNTER TOP 16 GA. SS T304 #4 FINISH
UNDER SHELF 18 GA. SS T304 #4 FINISH
OVER SHELF 18 GA. SS T304 #4 FINISH
CHANNELS 16 GA. SS T304 #4 FINISH
LEGS 1.63 x .06 WALL SS TUBE #4 FINISH
DRAWER FACE 14 GA. SS T304 #4 FINISH
DRAWER BODY 18 GA. SS T304 #4 FINISH
(2) C23-1450, (5_00 Caster w_o Brake)
(2)C23-1451, (5_00 Caster with Brake)

F8001 Rev B

1

AEJ

11/14/2025 D

Pacific Stainless PRODUCTS, INC.

F8001

Potting Bench, 55" x 28" x 24"

PSP STK - BUILD FOR OTHER JOBS
Potting Bench - Rev B

73031-001 REV 1 SHEET 2 OF 2